JeVois-Pro Main Board

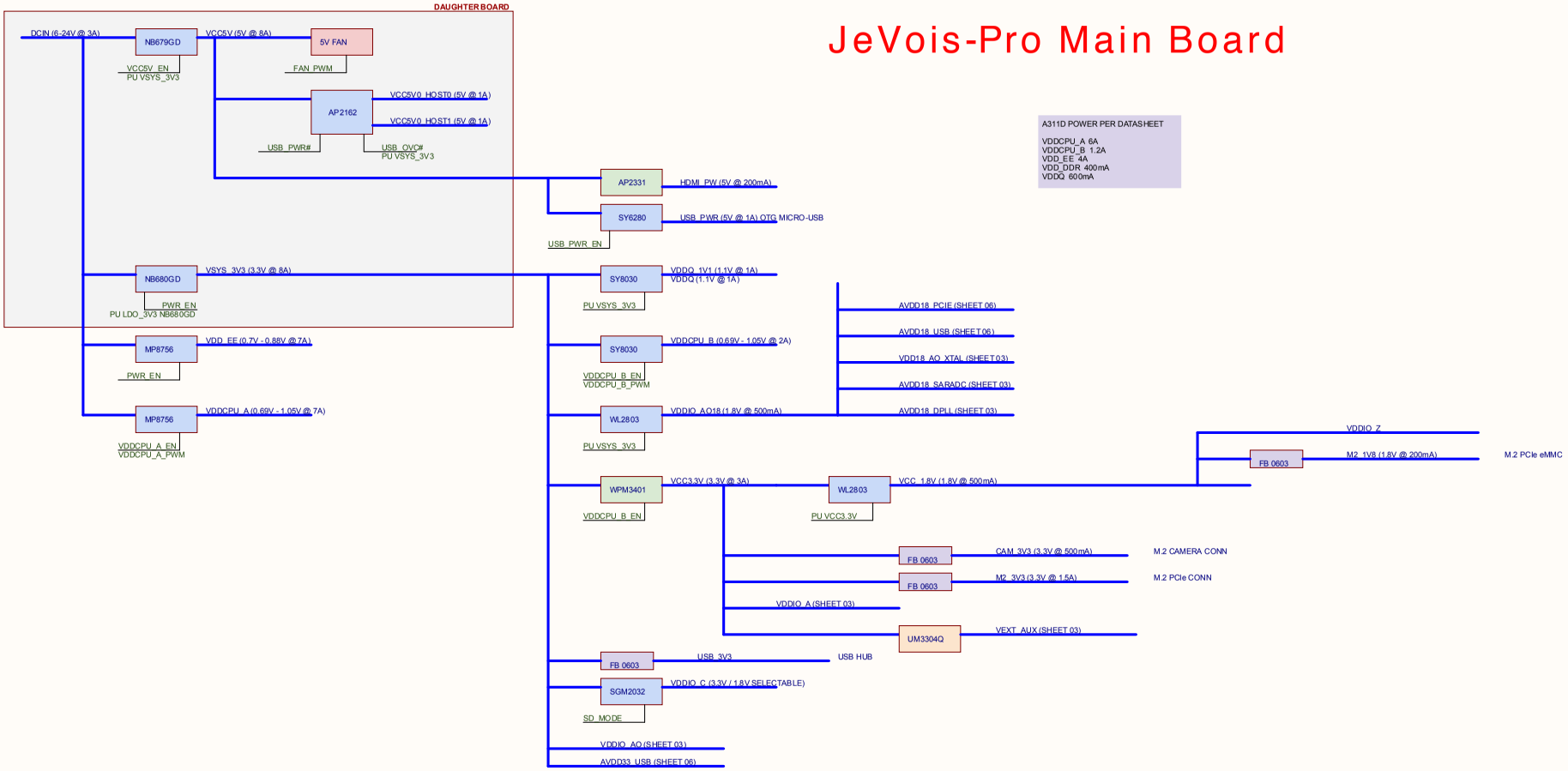

A311D POWER PER DATASHEET

VDDCPU_A 6A
VDDCPU_B 1.2A
VDD_EE 4A
VDD_DDR 400mA
VDDQ 600mA

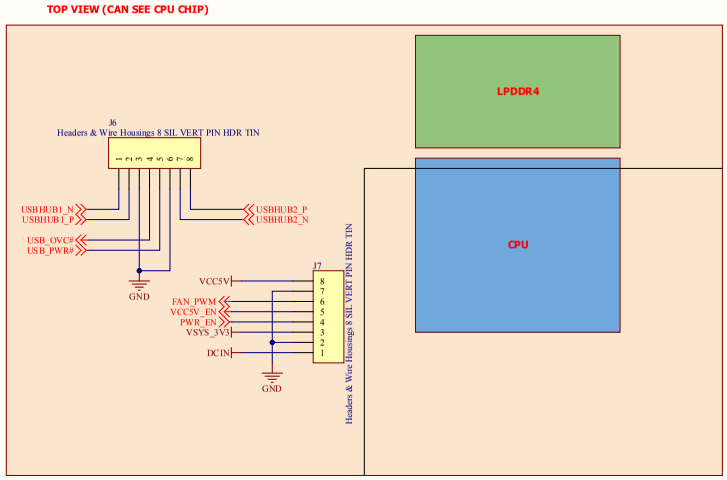

I2C PORTS:

I2C_AO_M0/S0: GPIOAO_2,3 - TO CAMERA CONN
I2C_EE_M2: CAMERA on GPIOZ_0,1
I2C_EE_M1: UNUSED (shared pins with I2C_EE_M0)
I2C_EE_M2: GPIOZ_14,15 - TO AUX CONN
I2C_EE_M3: GPIOA_14,15 - TO PCIE CONN

SPI PORTS:

SPI_A: GPIOX_8 TO 11 - TO CAMERA CONN
SPI_B: GPIOH_4 TO 7 - TO AUX CONN

UART PORTS:

UART_EE_A: BTUART TO PCIE CONN
UART_EE_B: N/A (WIFI SIGNALS INSTEAD)
UART_EE_C: N/A (SPIB INSTEAD)
UART_AO_A: TEST POINTS (BOOT MESSAGES)
UART_AO_B: TO 4-pin MICRO_SERIAL

PWM PINS:

PWM_A: GPIO_E2 - VDDCPU_A_PWM
PWM_B: GPIOZ_13 - CAM_MCLK2
PWM_C: GPIOZ_1 - UNAVAILABLE (pin used for CAM I2C)
PWM_D: GPIOA_4 - CAM_GPIO3_3V3
PWM_E: GPIOX_16 - WIFI_32K
PWM_F: UNUSED (AVAILABLE ON CAM_GPIO10)
PWMAO_A: GPIOAO_11 - CAM_MCLK
PWMAO_B: GPIOE_0 - VDDEE_PWM
PWMAO_C: GPIOAO_6 - FAN_PWM
PWMAO_D: GPIOE_1 - VDDCPU_B_PWM

CLOCK GENERATORS:

GPIOAO_11: GEN_CLK_AO (OR GEN_CLK_EE) - CAM_MCLK
GPIOZ_13: GEN_CLK_EE - CAM_MCLK2

FID1 FID2 FID3 FID4

Title	01 - Overview.SchDoc		
Size C	Number		Revision
Date:	9/17/2021	Sheet of	
File:	C:\Users...\01 - Overview.SchDoc	Drawn By:	

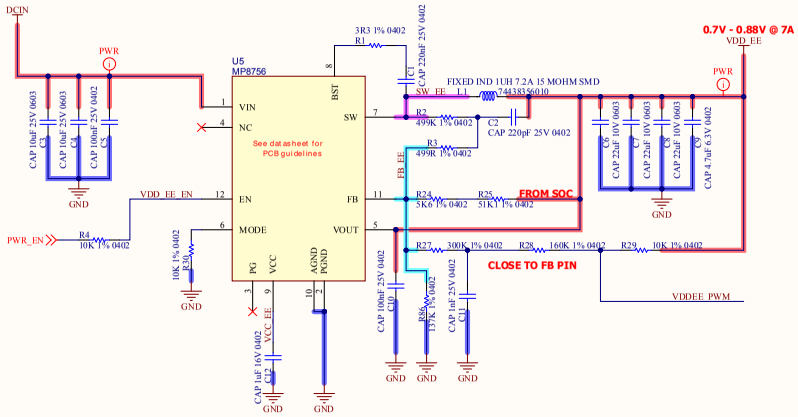

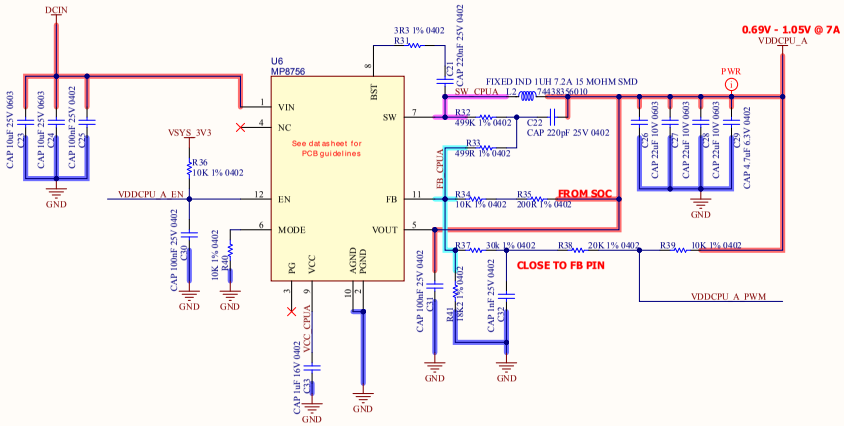

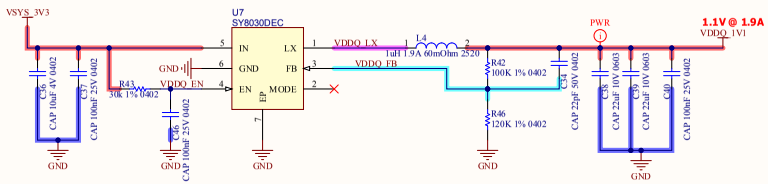

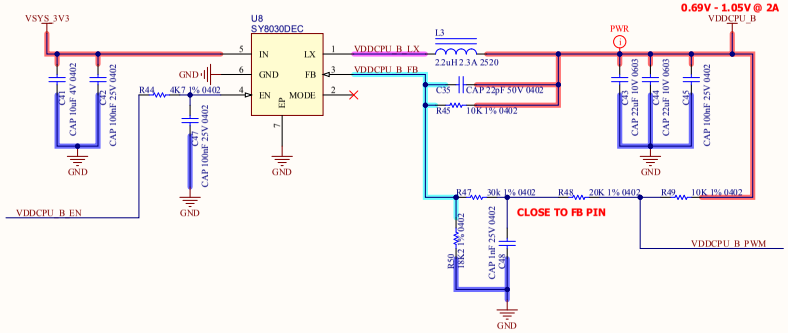

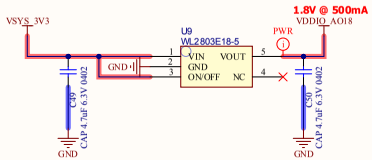

A311D POWER PER DATASHEET

VDDIO_AO18 AND VDD_EE ARE FIRST
THEN VSYS_3V3 AND VCC3.3V, >0.5ms AFTER VDD_EE

VSYS_3V3 SHOULD NEVER BE MORE THAN 2.5V HIGHER THAN VDDIO_AO18

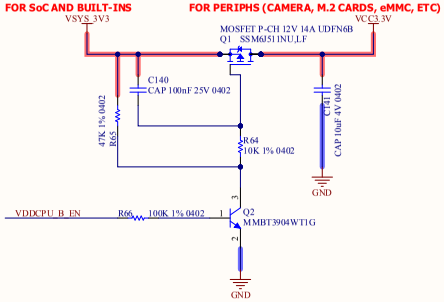

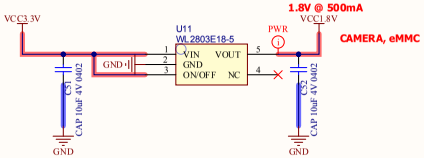

Title	02 - Power.SchDoc	
Size C	Number	Revision
Date: 9/17/2021		Sheet of
File: C:\Users\...\02 - Power.SchDoc		Drawn By:

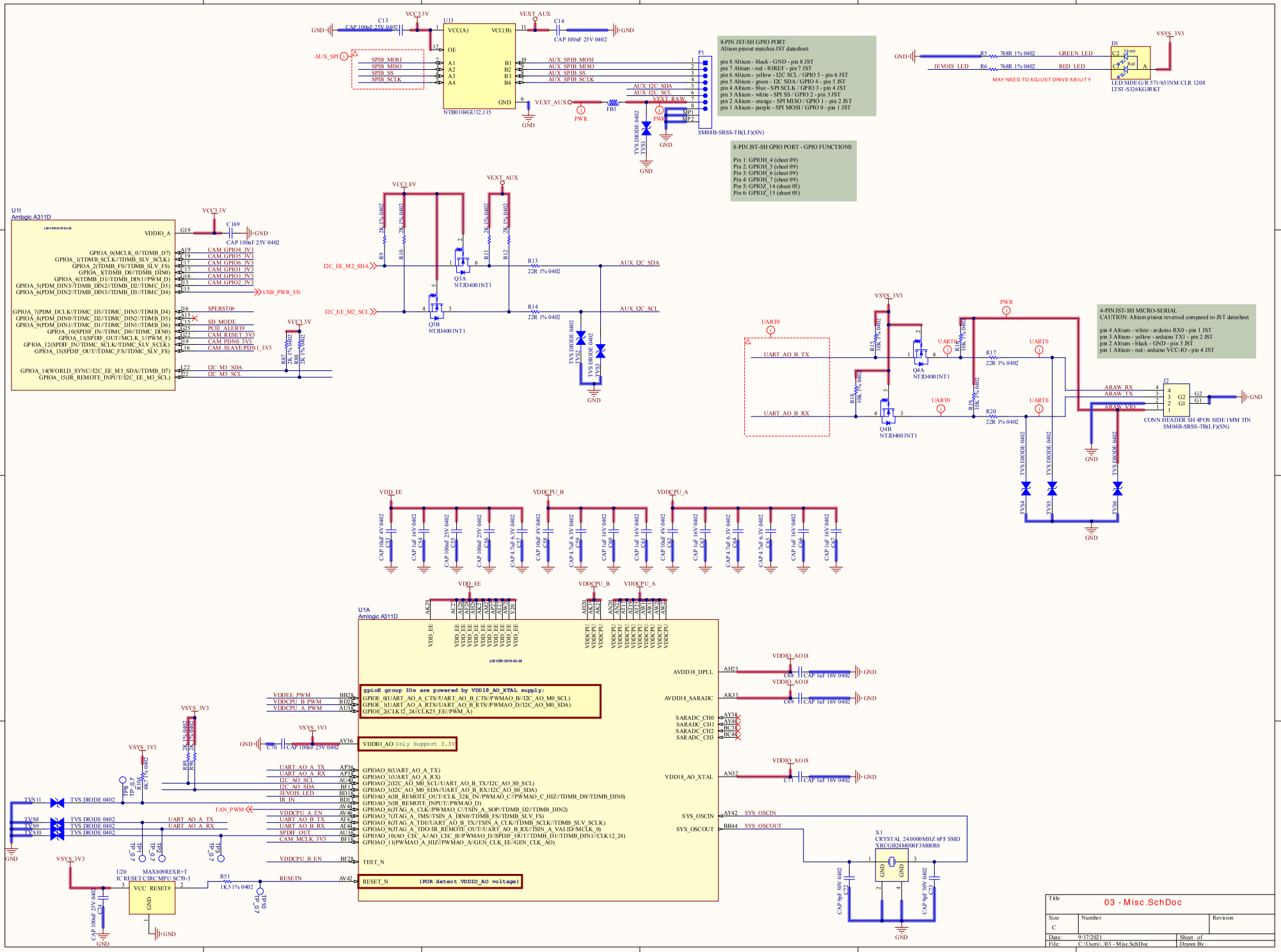
U13
NTB0104GU12,115
VCC(A)
VCC(B)
OE
A1
A2
A3
A4
B1
B2
B3
B4
GND
C13
CAP 100nF 25V 0402
C14
CAP 100nF 25V 0402
VCC3.3V
VEXT_AUX
AUX_SPI
SPIB_MOSI
SPIB_MISO
SPIB_SS
SPIB_SCLK
AUX_SPIB_MOSI
AUX_SPIB_MISO
AUX_SPIB_SS
AUX_SPIB_SCLK
AUX_I2C_SDA
AUX_I2C_SCL
VEXT_RAW
FB1
PWR
TVS DIODE 0402
TVS1
P1
SM08B-SRSS-TB(LF)(SN)
8-PIN JST-SH GPIO PORT
Altium pinout matches JST datasheet
pin 8 Altium - black - GND - pin 8 JST
pin 7 Altium - red - IOREF - pin 7 JST
pin 6 Altium - yellow - I2C SCL / GPIO 5 - pin 6 JST
pin 5 Altium - green - I2C SDA / GPIO 4 - pin 5 JST
pin 4 Altium - blue - SPI SCLK / GPIO 3 - pin 4 JST
pin 3 Altium - white - SPI SS / GPIO 2 - pin 3 JST
pin 2 Altium - orange - SPI MISO / GPIO 1 - pin 2 JST
pin 1 Altium - purple - SPI MOSI / GPIO 0 - pin 1 JST
8-PIN JST-SH GPIO PORT - GPIO FUNCTIONS
Pin 1: GPIOH_4 (sheet 09)
Pin 2: GPIOH_5 (sheet 09)
Pin 3: GPIOH_6 (sheet 09)
Pin 4: GPIOH_7 (sheet 09)
Pin 5: GPIOZ_14 (sheet 05)
Pin 6: GPIOZ_15 (sheet 05)
D1
LED SIDE G/R 571/631NM CLR 1208
LTST-S326KGJRKT
GREEN_LED
RED_LED
JEVOIS_LED
R5 768R 1% 0402
R6 768R 1% 0402
MAY NEED TO ADJUST DRIVE ABILITY
VSYS_3V3
U1I
Amlogic A311D
VDDIO_A
C169
CAP 100nF 25V 0402
GPIOA_0(MCLK_0//TDMB_D7)
GPIOA_1(TDMB_SCLK//TDMB_SLV_SCLK)
GPIOA_2(TDMB_FS//TDMB_SLV_FS)
GPIOA_3(TDMB_D0//TDMB_DIN0)
GPIOA_4(TDMB_D1//TDMB_DIN1//PWM_D)
GPIOA_5(PDM_DIN3//TDMB_DIN2//TDMB_D2//TDMC_D5)
GPIOA_6(PDM_DIN2//TDMB_DIN3//TDMB_D3//TDMC_D4)
GPIOA_7(PDM_DCLK//TDMC_D3//TDMC_DIN3//TDMB_D4)
GPIOA_8(PDM_DIN0//TDMC_D2//TDMC_DIN2//TDMB_D5)
GPIOA_9(PDM_DIN1//TDMC_D1//TDMC_DIN1//TDMB_D6)
GPIOA_10(SPDIF_IN//TDMC_D0//TDMC_DIN0)
GPIOA_11(SPDIF_OUT//MCLK_1//PWM_F)
GPIOA_12(SPDIF_IN//TDMC_SCLK//TDMC_SLV_SCLK)
GPIOA_13(SPDIF_OUT//TDMC_FS//TDMC_SLV_FS)
GPIOA_14(WORLD_SYNC//I2C_EE_M3_SDA//TDMB_D7)
GPIOA_15(IR_REMOTE_INPUT//I2C_EE_M3_SCL)
CAM_GPIO4_3V3
CAM_GPIO5_3V3
CAM_GPIO6_3V3
CAM_GPIO1_3V3
CAM_GPIO3_3V3
CAM_GPIO2_3V3
USB_PWR_EN
SPERST0#
SD_MODE
PCIE_ALERT0#
CAM_RESET_3V3
CAM_PDN0_3V3
CAM_SLAVE/PDN1_3V3
I2C_M3_SDA
I2C_M3_SCL
R87 2K 1% 0402
R88 2K 1% 0402
VCC1.8V
2K 1% 0402
R9
R10
R11
R12
Q3A
NTJD4001NT1
Q3B
NTJD4001NT1
I2C_EE_M2_SDA
I2C_EE_M2_SCL
R13 22R 1% 0402
R14 22R 1% 0402
AUX_I2C_SDA
AUX_I2C_SCL
TVS DIODE 0402
TVS2
TVS3
UART0
UART_AO_B_TX
UART_AO_B_RX
R15 10K 1% 0402
R16 10K 1% 0402
R18 10K 1% 0402
R19 10K 1% 0402
Q4A
NTJD4001NT1
Q4B
NTJD4001NT1
R17 22R 1% 0402
R20 22R 1% 0402
PWR
4-PIN JST-SH MICRO-SERIAL
CAUTION: Altium pinout reversed compared to JST datasheet
pin 4 Altium - white - arduino RX0 - pin 1 JST
pin 3 Altium - yellow - arduino TX1 - pin 2 JST
pin 2 Altium - black - GND - pin 3 JST
pin 1 Altium - red - arduino VCC-IO - pin 4 JST
J2
ARAW_RX
ARAW_TX
ARAW_VIO
CONN HEADER SH 4POS SIDE 1MM TIN
SM04B-SRSS-TB(LF)(SN)
TVS4
TVS5
TVS6
VDD_EE
VDDCPU_B
VDDCPU_A
CAP 10uF 4V 0402
CAP 1uF 16V 0402
CAP 100nF 25V 0402
CAP 4.7uF 6.3V 0402
U1A
Amlogic A311D
LIB VER:2019-02-20
gpioE group IOs are powered by VDD18_AO_XTAL supply:
GPIOE_0(UART_AO_A_CTS/UART_AO_B_CTS//PWMAO_B//I2C_AO_M0_SCL)
GPIOE_1(UART_AO_A_RTS//UART_AO_B_RTS//PWMAO_D//I2C_AO_M0_SDA)
GPIOE_2(CLK12_24//CLK25_EE//PWM_A)
VDDEE_PWM
VDDCPU_B_PWM
VDDCPU_A_PWM
VDDIO_AO Only Support 3.3V
GPIOAO_0(UART_AO_A_TX)
GPIOAO_1(UART_AO_A_RX)
GPIOAO_2(I2C_AO_M0_SCL//UART_AO_B_TX//I2C_AO_S0_SCL)
GPIOAO_3(I2C_AO_M0_SDA//UART_AO_B_RX//I2C_AO_S0_SDA)
GPIOAO_4(IR_REMOTE_OUT//CLK_32K_IN//PWMAO_C//PWMAO_C_HIZ//TDMB_D0//TDMB_DIN0)
GPIOAO_5(IR_REMOTE_INPUT//PWMAO_D)
GPIOAO_6(TAG_A_CLK//PWMAO_C//TSIN_A_SOP//TDMB_D2//TDMB_DIN2)
GPIOAO_7(TAG_A_TMS//TSIN_A_DIN0//TDMB_FS//TDMB_SLV_FS)
GPIOAO_8(TAG_A_TDI//UART_AO_B_TX//TSIN_A_CLK//TDMB_SCLK//TDMB_SLV_SCLK)
GPIOAO_9(TAG_A_TDO//IR_REMOTE_OUT//UART_AO_B_RX//TSIN_A_VALID//MCLK_0)
GPIOAO_10(AO_CEC_A//AO_CEC_B//PWMAO_D//SPDIF_OUT//TDMB_D1//TDMB_DIN1//CLK12_24)
GPIOAO_11(PWMAO_A_HIZ//PWMAO_A/GEN_CLK_EE//GEN_CLK_AO)
TEST_N
RESET_N (POR detect VDDIO_AO voltage)
AVDD18_DPLL
AVDD18_SARADC
SARADC_CH0
SARADC_CH1
SARADC_CH2
SARADC_CH3
VDD18_AO_XTAL
SYS_OSCIN
SYS_OSCOUT
VDDIO_AO18
CAP 1uF 16V 0402
X1
CRYSTAL 24.0000MHZ 6PF SMD
XRCGB24M000F3M00R0
CAP 9pF 50V 0402
FAN_PWM
TVS11
TVS8
TVS9
TVS10
TVS DIODE 0402
UART_AO_A_TX
UART_AO_A_RX
I2C_AO_SCL
I2C_AO_SDA
JEVOIS_LED
IR_IN
SPDIF_OUT
CAM_MCLK_3V3
R89 2K 1% 0402
R90 2K 1% 0402
FB8 TP_0.7
R104 4K7 1% 0402
TP1 TP_0.7
TP2 TP_0.7
TP3 TP_0.7
U20
MAX809REXR+T
IC RESET CIRC MPU SC70-3
VCC RESET#
GND
R51 1K3 1% 0402
RESETN
TP10 TP_0.7
C70 CAP 100nF 25V 0402
C74 CAP 100nF 25V 0402
GND
Title
03 - Misc.SchDoc
Size
C
Number
Revision
Date: 9/17/2021
Sheet of
File: C:\Users\...\03 - Misc.SchDoc
Drawn By:

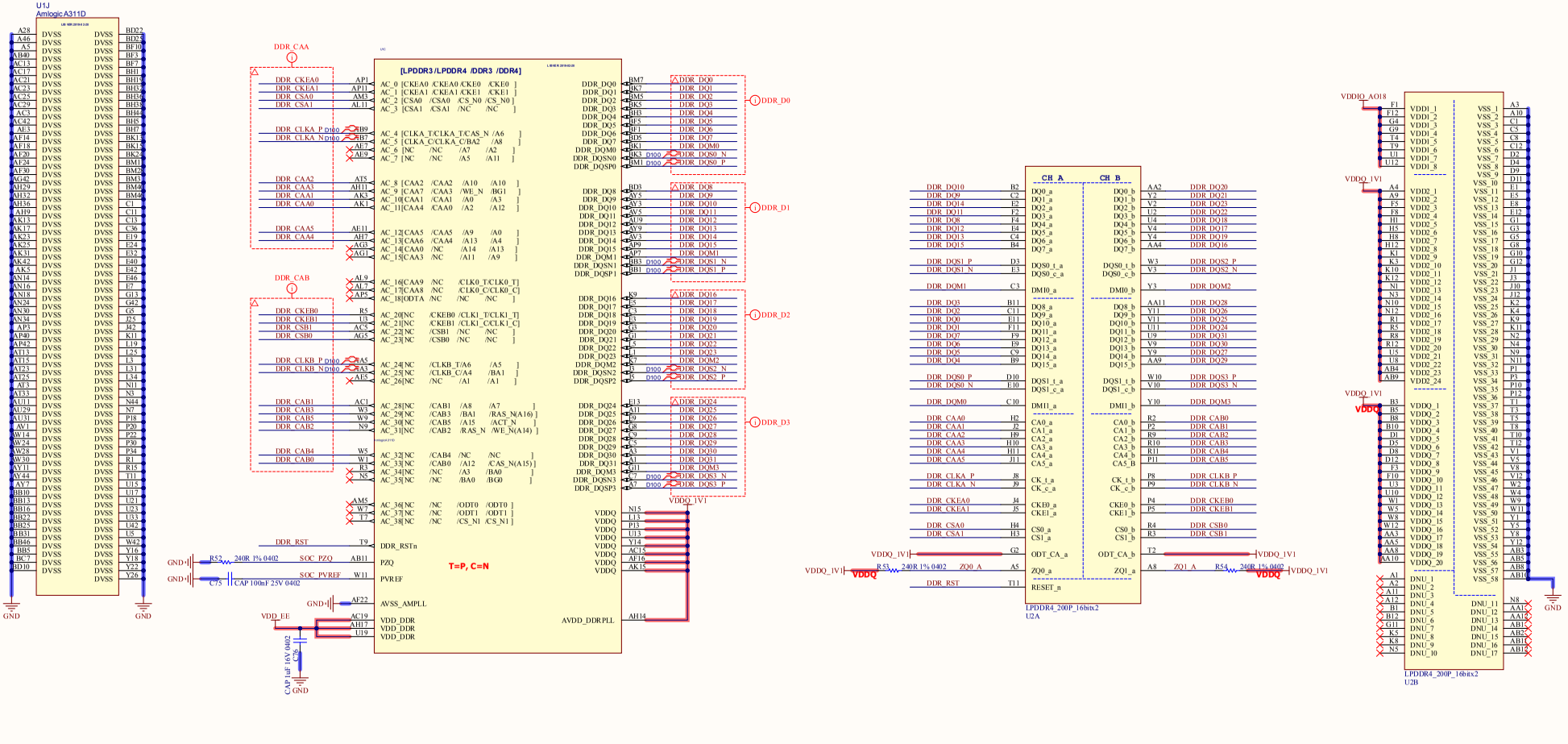

Title	04 - LPDDR4.SchDoc	
Size C	Number	Revision
Date: 9/17/2021	Sheet of	
File: C:\Users\...\04 - LPDDR4.SchDoc	Drawn By:	

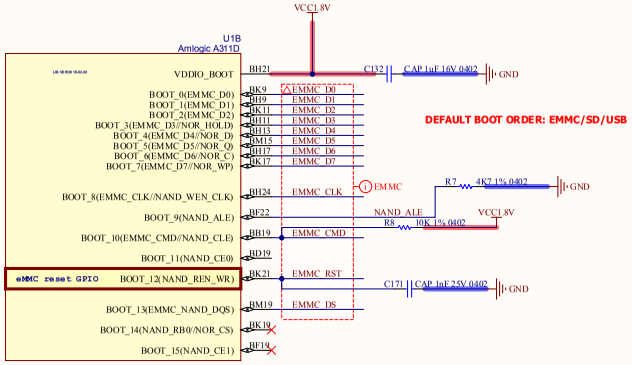

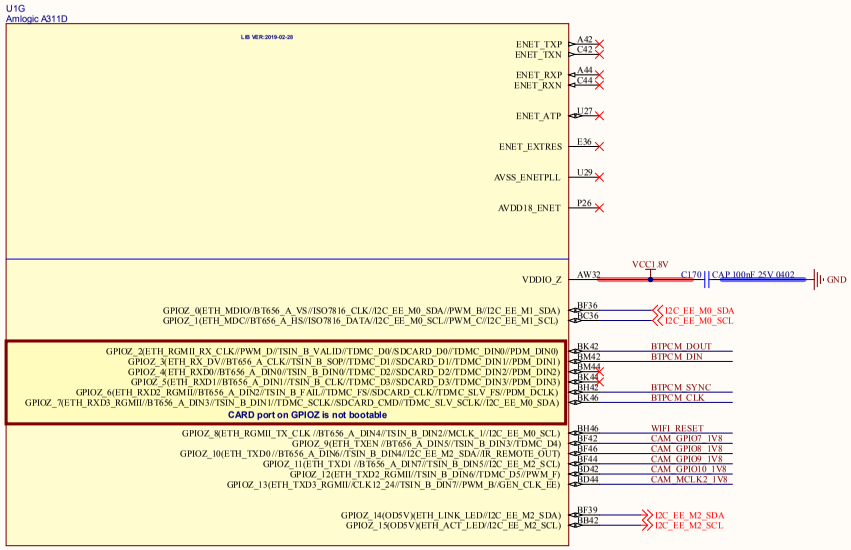

Title	05 - Misc 2.SchDoc	
Size C	Number	Revision
Date: 9/17/2021		Sheet of
File: C:\Users\ \05 - Unused.SchDoc		Drawn By:

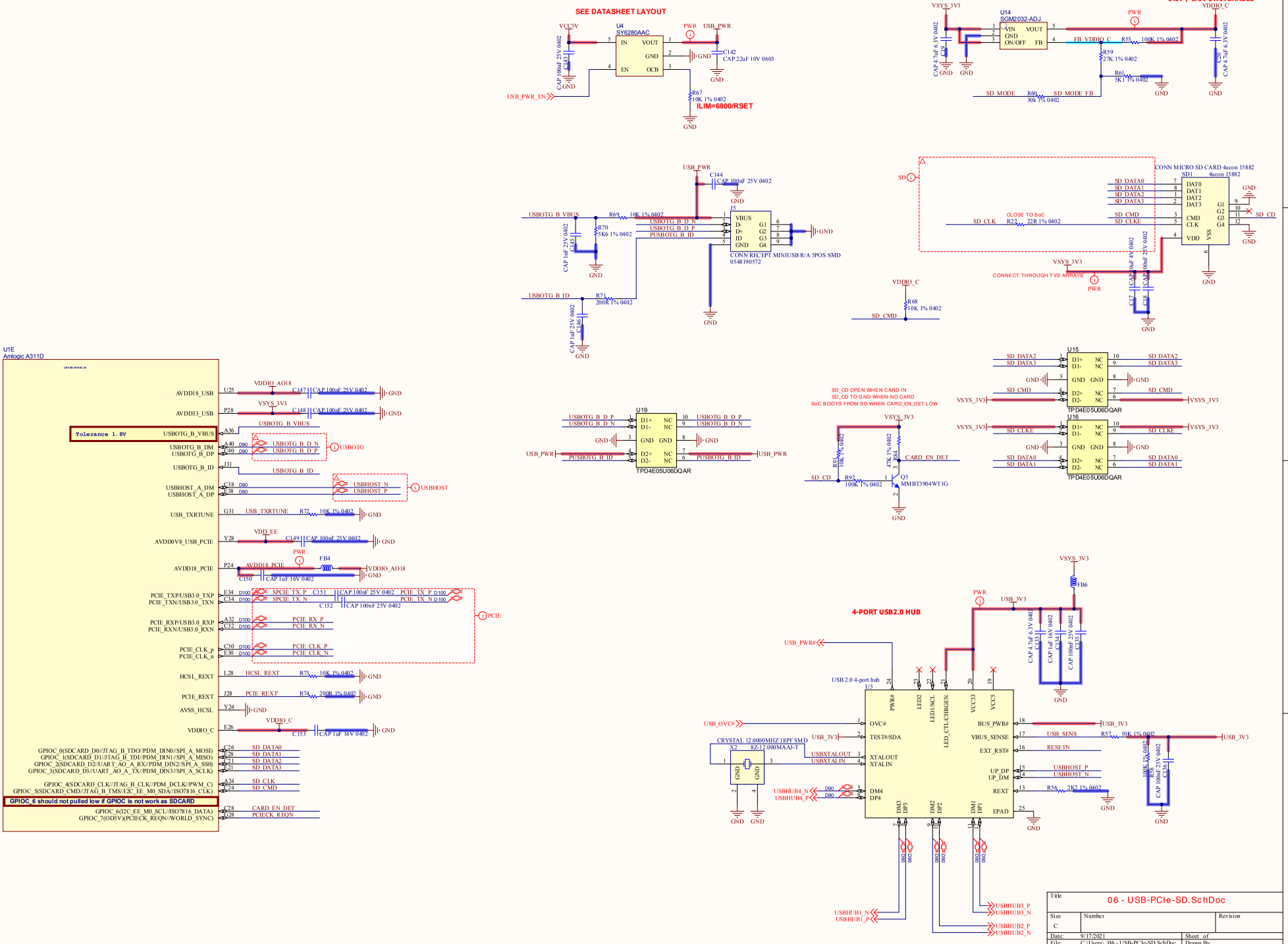
SEE DATASHEET LAYOUT
U4
SY6280AAC
ILIM=6800/RSET
3.3V / 1.8V SWITCHABLE
U14
SGM2032-ADJ
CONN MICRO SD CARD 4ucon 15882
SD1
CLOSE TO SoC
CONNECT THROUGH TVS ARRAYS
CONN RECEPT MINIUSB R/A 5POS SMD
0548190572
U19
TPD4E05U06DQAR
U15
U16
SD_CD OPEN WHEN CARD IN
SD_CD TO GND WHEN NO CARD
SoC BOOTS FROM SD WHEN CARD_EN_DET LOW
MMBT3904WT1G
U1E
Amlogic A311D
Tolerance 1.8V
GPIOC_6 should not pulled low if GPIOC is not work as SDCARD
4-PORT USB2.0 HUB
USB 2.0 4-port hub
U13
CRYSTAL 12.0000MHZ 18PF SMD
X2
8Z-12.000MAAJ-T
Title
06 - USB-PCIe-SD.SchDoc
Size
C
Number
Revision
Date: 9/17/2021
Sheet of
File: C:\Users\...\06 - USB-PCIe-SD.SchDoc
Drawn By:

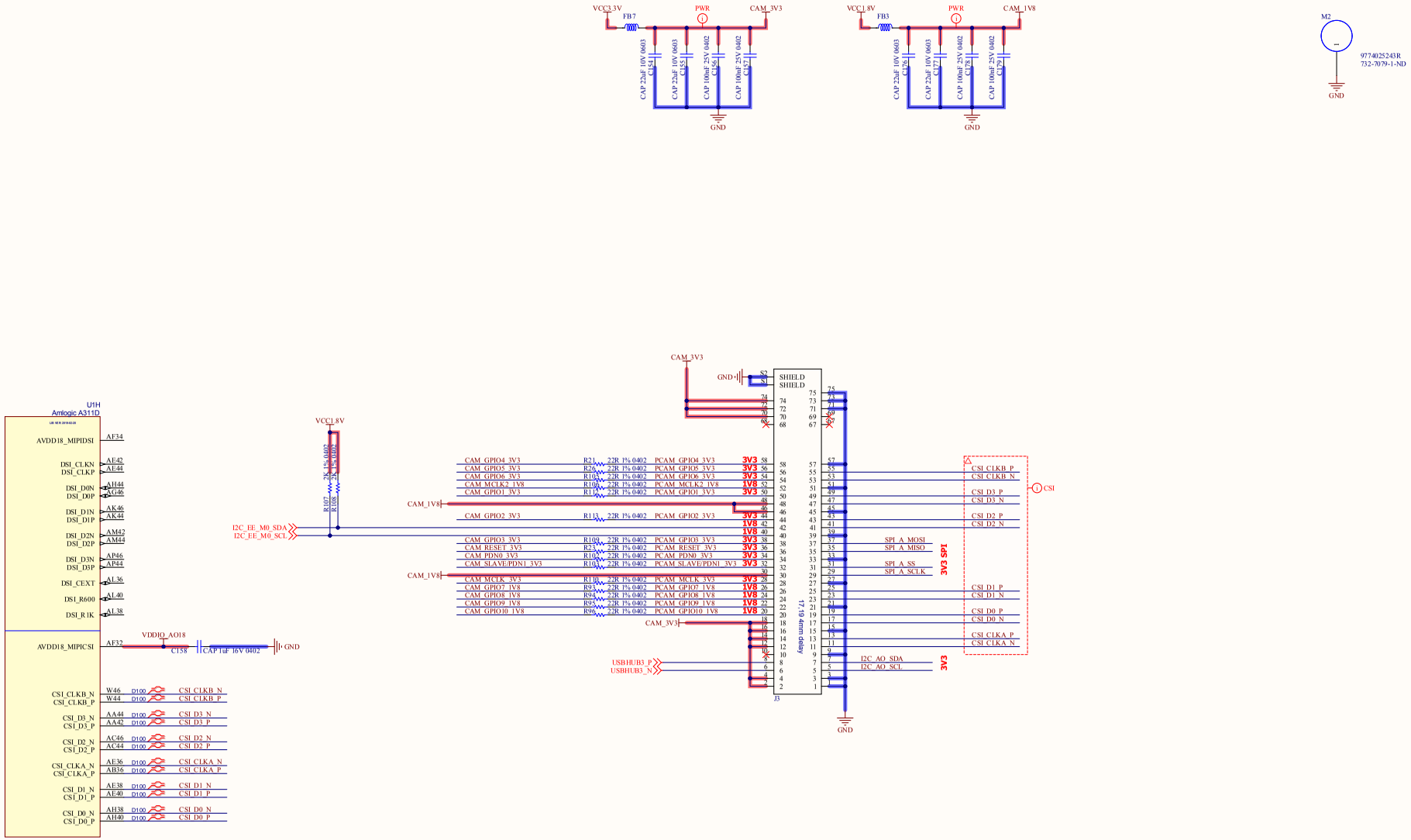

Title	07 - Camera-Conn.SchDoc		
Size C	Number		Revision
Date: 9/17/2021		Sheet of	
File: C:\Users\...\07 - Camera-Conn.SchDoc		Drawn By:	

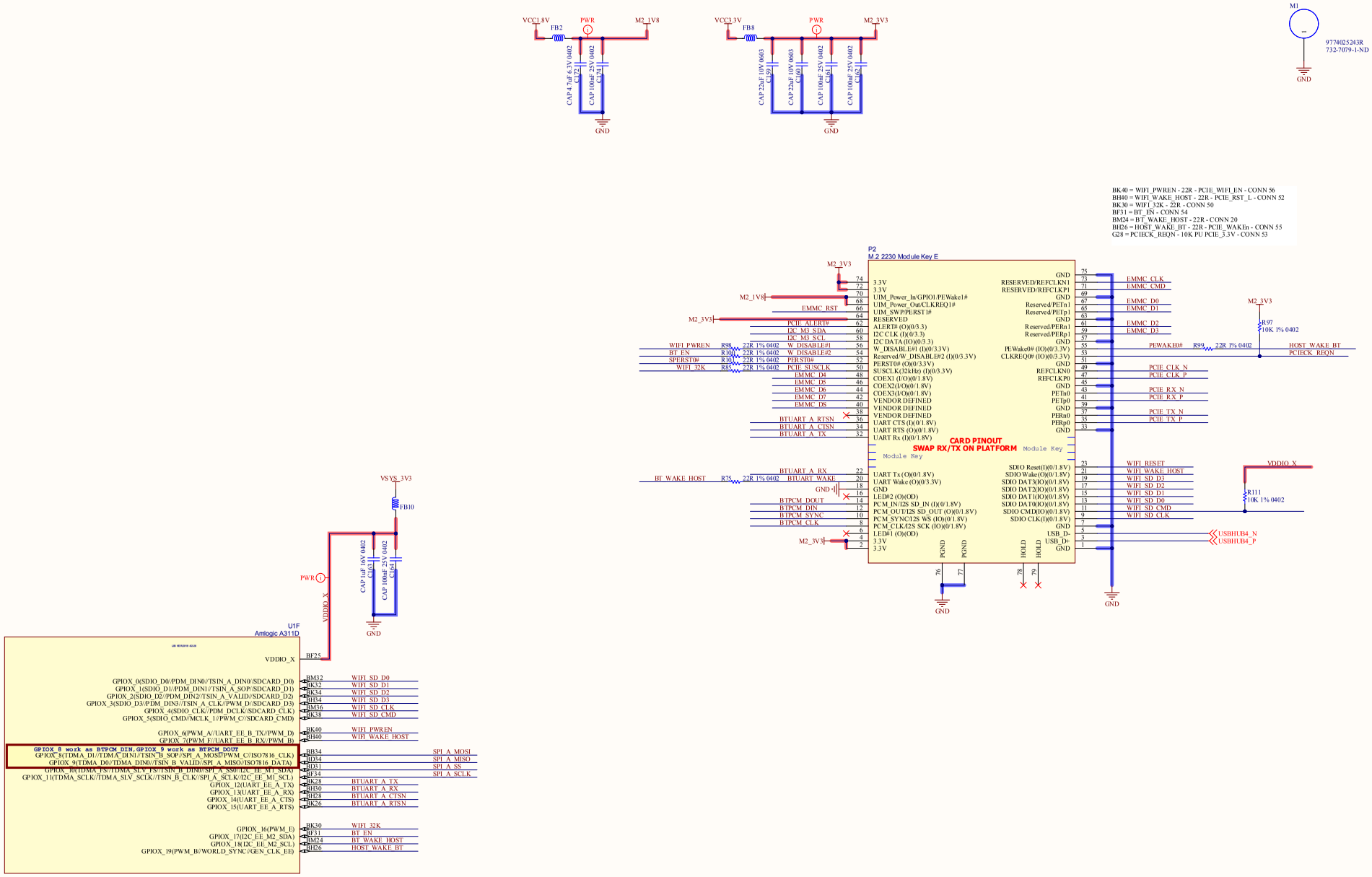

Title	08 - M.2-PCIe-Conn.SchDoc		
Size C	Number		Revision
Date: 9/17/2021		Sheet of	
File: C:\Users\...\08 - M.2-PCIe-Conn.SchDoc		Drawn By:	

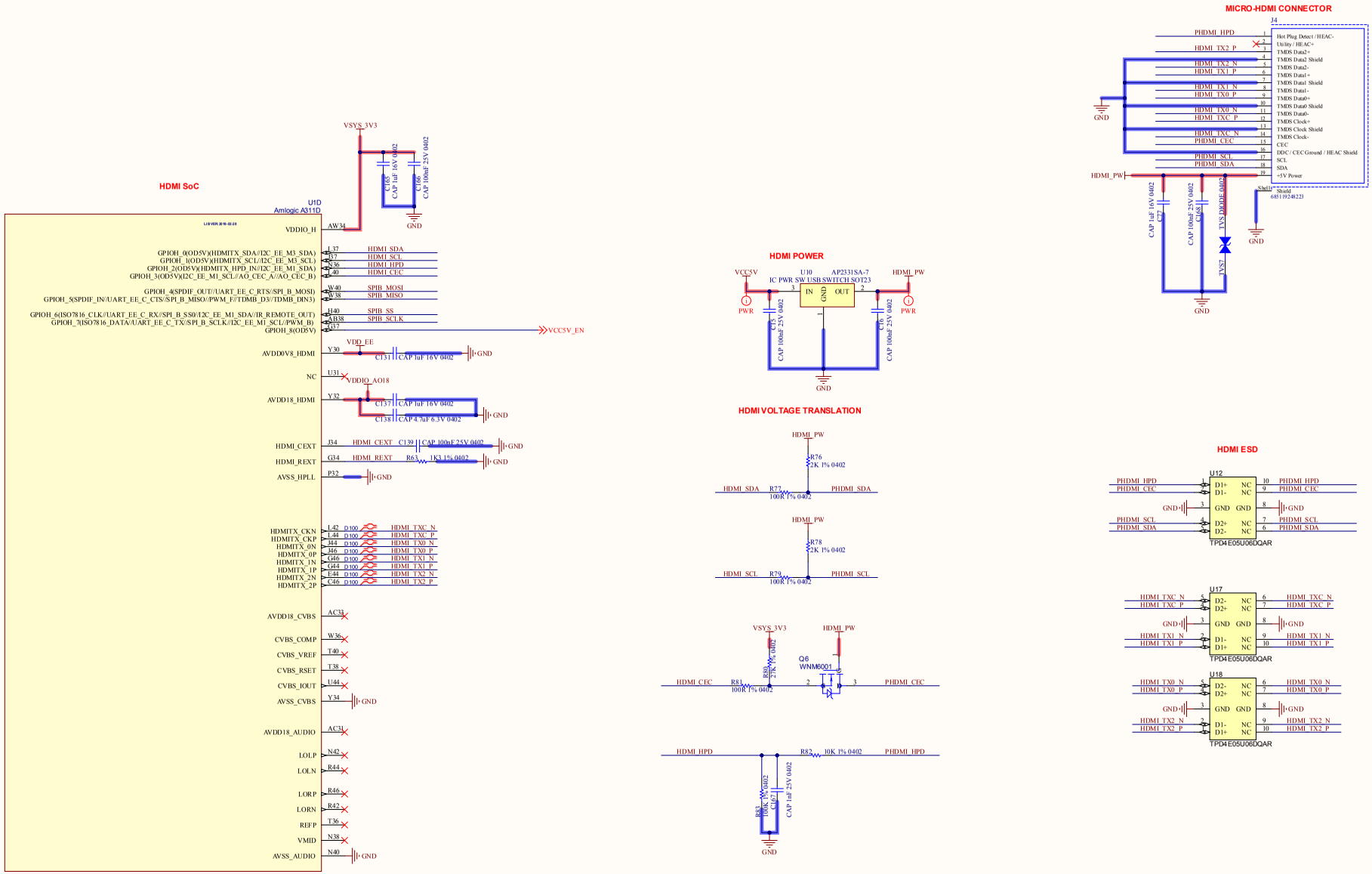

Title	09 - HDMI.SchDoc		
Size C	Number		Revision
Date: 9/17/2021		Sheet of	
File: C:\Users\...\09 - HDMI.SchDoc		Drawn By:	

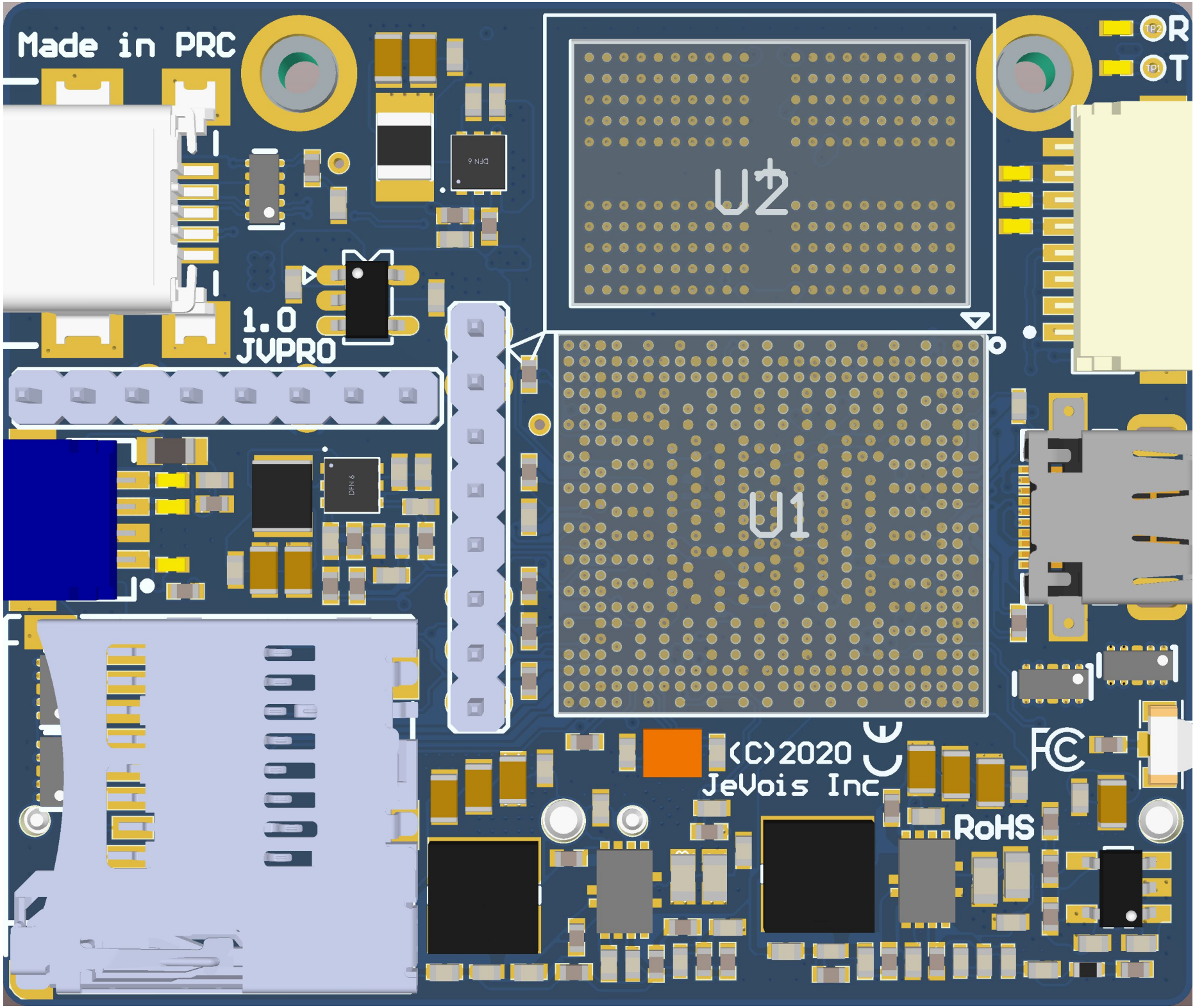
Made in PRC
U2
U1
1.0
JVPRO
R
T
(C)2020
JeVois Inc
RoHS

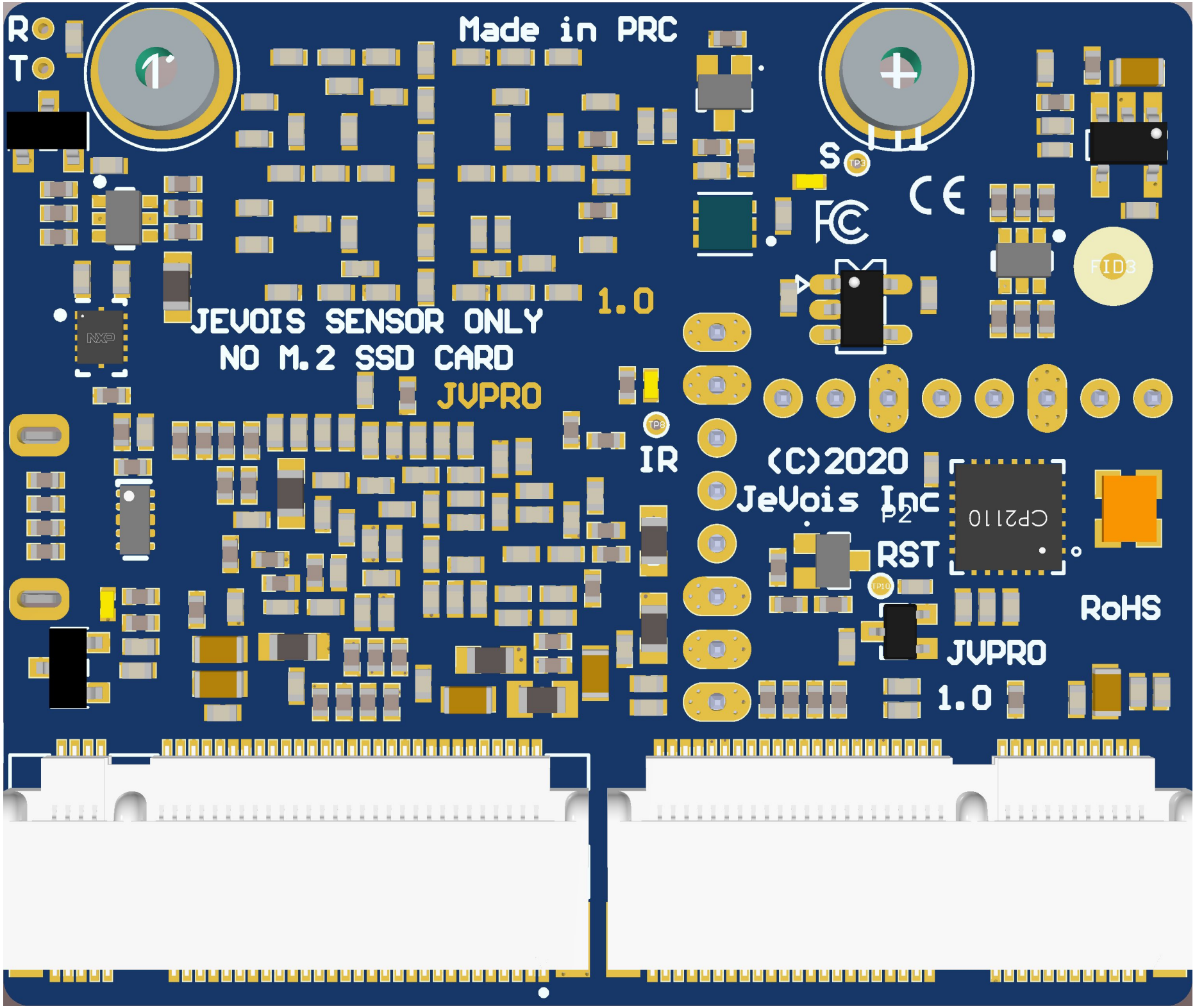
Made in PRC
R
T
S
JEVOIS SENSOR ONLY
NO M.2 SSD CARD
JVPRO
1.0
IR
(C)2020
JeVois Inc
P2
RST
CP2110
RoHS
JVPRO
1.0